DRAWING NO. SE211915

REV	DATE	DESCRIPTION	ECO	BY	C'H'K.
E	02/01/2016 09:30:00 AM	NOTE #10 UPDATED	41185	BSB	RG

CATALOG NO.	CONDUCTOR CODE (AWG)	CONDUCTOR NAVY <5>	BOLT SIZE	FIG. NO.	DIMENSIONS B ±.03	C +.04 -.02	E ±.02	H REF.	K DIA. ±.02	L ±.06	N ±.04	O.D. ±.01	T REF.	Y MIN.	INSTALLATION TOOLING (# CRIMPS) DIE INDEX	COLOR CODE	MECHANICAL RATCHET MD7-34R MD6	MECHANICAL RATCHET OUR840	MECHANICAL RATCHET YIMRTC <6> Y122CMR	HYDRAULIC Y34A <8>	HYDRAULIC Y750 Y35, Y39	HYDRAULIC Y46 <4>	HYDRAULIC Y45 <3>	DIELESS (# CRIMPS)	WIRE STRIP LENGTH
YAZ6C2TC14	#6 STR #6 SOL	30	1/4 [M6]	1	1.12 [28]	.45 [11]	.63 [16]	----	.27 [7]	2.65 [67]	.31 [8]	.29 [7]	.08 [2]	.96 [24]	7 OR 374	BLUE	W5CVT W5CRT (2)	W5CVT W5CRT (2)	BLUE (2)	A5CR (2)	U5CRT U8CABT (2)	U5CRT U8CABT (2)	U5CRT U8CABT (2)	MECHANICAL: MY29-11 (1) HYDRAULIC: Y644 (1) <9> PAT644 (1) Y81KFT (1) PAT81KFT (1)	1-3/16
YAZ6C2TC1445				2				1.19 [30]		2.45 [62]															
YAZ6C2TC1490 <10>				3				1.50 [38]		1.51 [38]															
YAZ6C2TC10			#10 [M5]	1		.42 [11]	.63 [16]	----	.21 [5]	2.53 [64]	.25 [6]		.09 [2]	.90 [23]											
YAZ6C2TC1045				2				1.19 [30]		2.33 [59]															
YAZ6C2TC1090 <10>				3				1.50 [38]		1.39 [35]															
YAZ6C2TC10E2	#6 STR #6 SOL	30	#10 [M5]	1	1.12 [28]	.42 [11]	.75 [19]	----	.21 [5]	2.65 [67]	.25 [6]	.29 [7]	.09 [2]	1.03 [26]	7 OR 374	BLUE			BLUE (2)	A5CR (2)	U5CRT U8CABT (2)	U5CRT U8CABT (2)	U5CRT U8CABT (2)		1-3/16
YAZ6C2TC10E245				2				1.19 [30]		2.48 [63]															
YAZ6C2TC10E290 <10>				3				1.52 [39]		1.51 [38]															

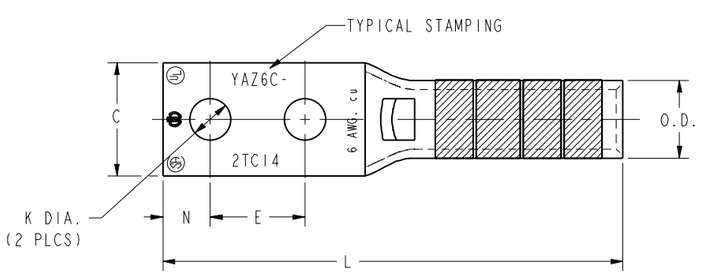

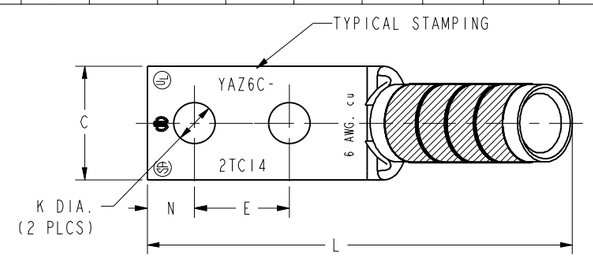

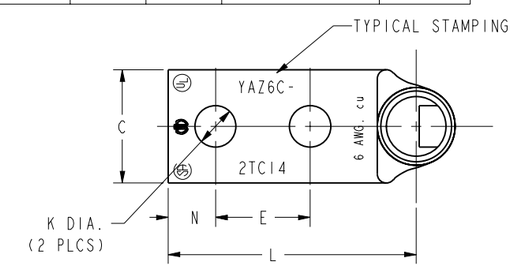

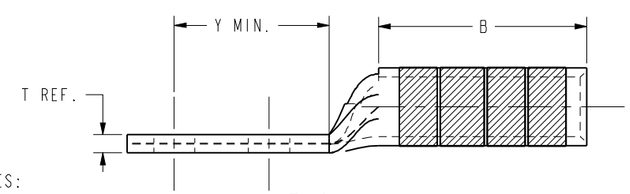

FIG 1

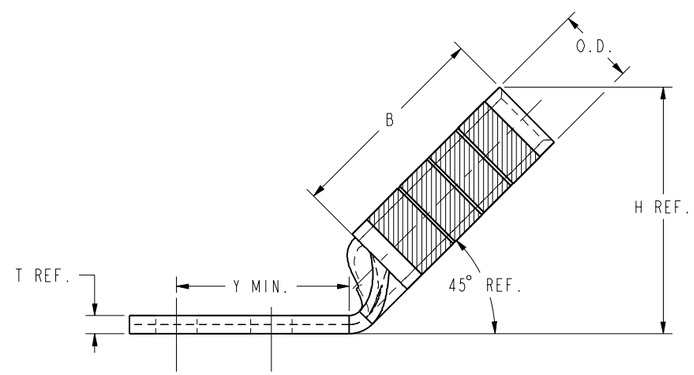

FIG 2

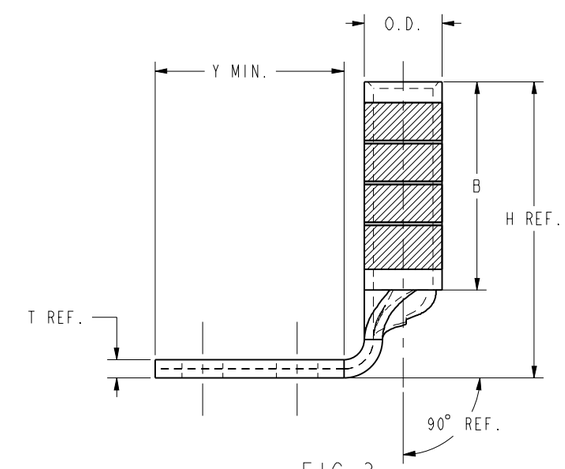

FIG 3

NOTES:

1. MATERIAL: COPPER TUBING.
2. FINISH: TIN PLATED
3. CATALOG # PT6515 ADAPTOR IS REQUIRED TO USE "U" DIES IN Y45 SERIES TOOLS.
4. CATALOG # PUADP-1 ADAPTOR IS REQUIRED TO USE "U" DIES IN Y46 SERIES TOOLS.
5. NAVY CABLE SIZE MAY BE OMITTED ON SOME SIZES BECAUSE OF SPACE LIMITATIONS.
6. PERMANENT DIE IN TOOLING.
7. DIMENSIONS, METRIC WIRE, & METRIC BOLT SIZES IN BRACKETS [ ] ARE IN MILLIMETERS. DIMENSIONS ARE ROUNDED OFF TO THE NEAREST MILLIMETER, UNLESS OTHERWISE NOTED, AND ARE FOR REFERENCE ONLY.
8. FOR USE BY CUSTOMERS THAT HAVE THIS HYPRESS.™ NO NEW Y34A HYPRESS™ ARE BEING PROCESSED.
9. DO NOT USE PAT644 OR Y644 TOOLING WITH 6 AWG SOL.
10. THESE CATALOG NUMBERS CANNOT BE INSTALLED WITH Y45 TOOLING.

TO ORDER BURNDY® PRODUCTS CALL

UNITED STATES
1-800-346-4175 (LONDONDERRY, NH)

CANADA:
1-800-361-6975 (QUEBEC)
1-800-387-6487 (ALL OTHER PROVINCES)

FOR PRODUCT INFO: http://www.burndy.com

HYLUG™

ITEM NO:	N/A
CAT. NO:	YAZ6C-2TC- (SEE TABLE)
DRAWN BY:	D.BOISVERT 11/11/98
CHECKER:	K.HENRY 12/03/98
DSN APPVL:	B.MACDONALD 12/02/98
MFG APPVL:	N/A --
QA APPVL:	S.GARY 11/30/98
MKT APPVL:	B.HARDGROVE 11/25/98
SCALE:	4:1
PROD FAM:	--
PROJECT #:	--
DOCUMENT TYPE:	Sales
REL LEVEL:	Released
SIZE	D
DRAWING NO	SE211915
REV	E
SHEET	5 OF 36

BURNDY

REV: PE0200